Spacecraft & Instrument Electrical System Design

September 2002

Mitchell Davis
NASA/GSFC Code 565
(301) 286-4114
Mitchell.Davis@gsfc.nasa.gov

Goal of this Presentation

1. Provide the basics on Grounding Requirements.
2. Discuss the feared Ground Loops
3. Discuss the most common EMC problem, (power supplies)
4. Discuss Electromagnetic Effects using a structured method, specific terms. [Thus avoiding general and non-descript terms like "…it must be a ground loop…".

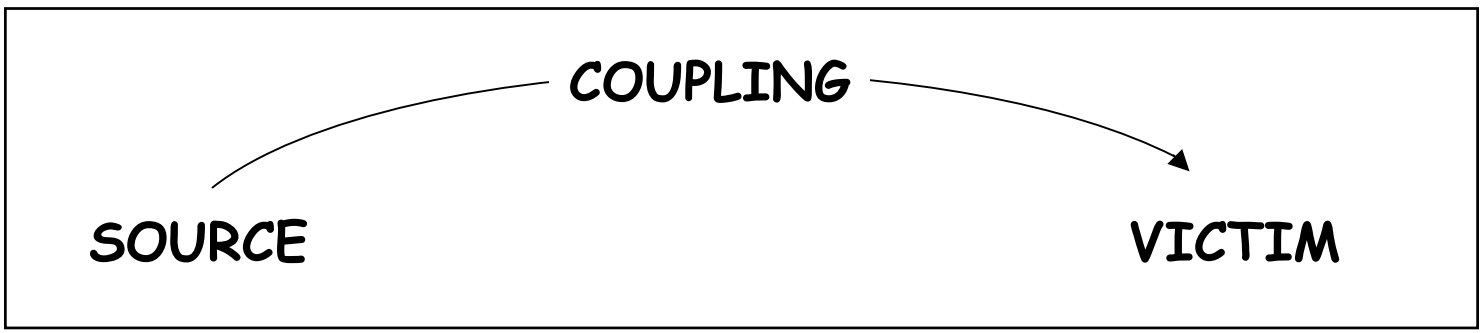

This will result in a coordinated plan to control the subsystems' electro-magnetic interactions and eliminates worrying about imaginary problems.

Spacecraft Grounds
&
Design Concepts

Grounding Requirements

- The spacecraft/instrument grounding requirements are **NOT** dictated by some generic NASA-wide document.

- The spacecraft/instrument grounding requirements are defined by the specific system constraints.

- These requirements are usually documented at the start of the development phase in a project specific document.

- The general approach is to select a design that separates the noise Sources from the Victims.

"Ground" Definition

The Three Spacecraft Grounds:

1. **<u>STRUCTURE GROUND (CHASSIS):</u>**

Refers to any/all conductive mass on the spacecraft, including shields.

2. **<u>PRIMARY POWER RETURN (GROUND PLANE):</u>** or

Refers to the (typically +28 Volt) power return that is distributed to the subsystems.

3. **<u>SECONDARY VOLTAGE RETURN (GROUND PLANE):</u>** or

Refers to any/all voltage returns generated by the subsystem from the primary power, (e.g. +5V, ±12V, 500V).

Structure Ground

STRUCTURE (CHASSIS) GROUND:

Typical Requirement:

All conductive structures (including outer shields) must be connected with minimal *impedance* as possible. Usually, a maximum DC resistance (2-50mΩ) between structures is defined. (Note: the key AC impedance is not specified!)

Comments:

• Structure is never a path for DC currents from primary or secondary voltages. Only RF signals and high frequency "leakage" currents should be allowed to flow in structure.

Primary Ground

PRIMARY POWER GROUND (RETURN):

Typical Requirement:

1. The primary power return is connected to Structure ground at only **ONE** location (in the spacecraft power system). For users, there is a "high resistance" isolation required (1 to 10 MΩ) specified between 28V Return and chassis .

2. The primary power return is **ALWAYS** isolated (typically >100kΩ) from secondary return at all users.

3. Multiple Power Feeds may or may not be required to be isolated from each other at the user's end. [It's dependent on the spacecraft power system design.]

Secondary Ground(s)

SECONDARY VOLTAGE GROUND (RETURN):
Typical Requirements:

1. **Never** completely isolate or float a secondary return relative to chassis!

2. "Single Point Ground" or "Star Ground": All secondary voltage returns are connected to Structure Ground through ONE path, however this "path" may have several branches (tree).

Or

3. "Multi-point or RF Ground": The local structure becomes the secondary power return path. Every signal return/secondary power return in the system is connected to the conductive structure with minimal impedance.

Comments: There are no hard rules for selecting the secondary power grounding approach (RF vs. Single Point Ground). Basically, if you cannot keep the signal on the wires, go with the RF Ground approach.

Single Point Ground

- A "Single Point Ground" design is intended to mean that all secondary voltages (that have been generated by an isolation transformer) are reference to chassis in such a manner that current cannot flow in the chassis.

- A "Single Point Ground" design is **NOT** intended to mean that all secondary voltages must be connected to chassis at one physical point. The wire inductance makes this approach impractical!

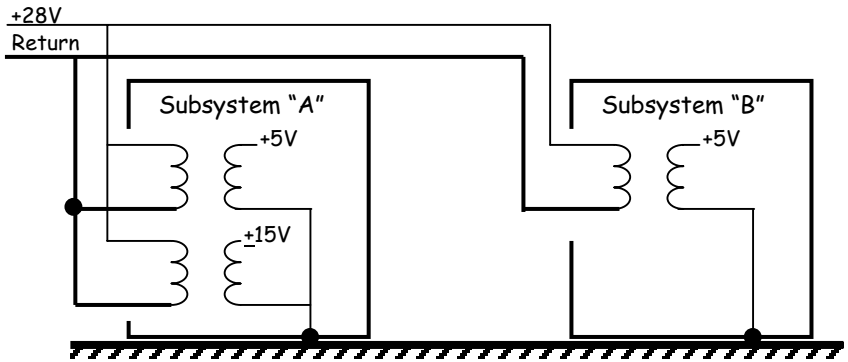

Correct: Subsystem A's Secondary Returns chassis reference point may be meters away from Subsystem B's Secondary Return chassis reference point.

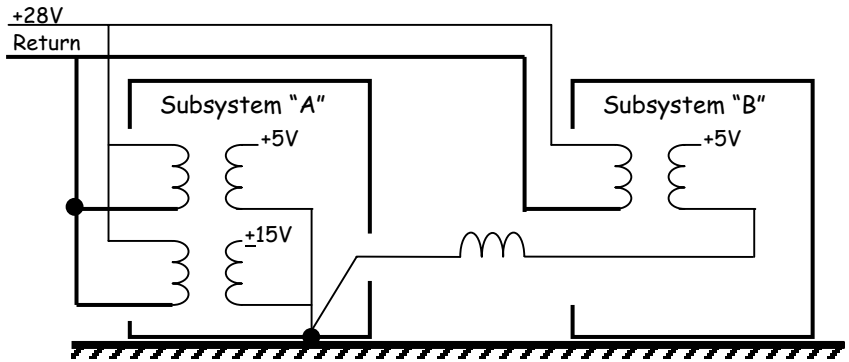

Incorrect: All current from Subsystem B's secondary voltage that capacitively couples to chassis will create a voltage across the wire inductance.

Current Flow

Tree Structure for the Single Point Ground Concept:

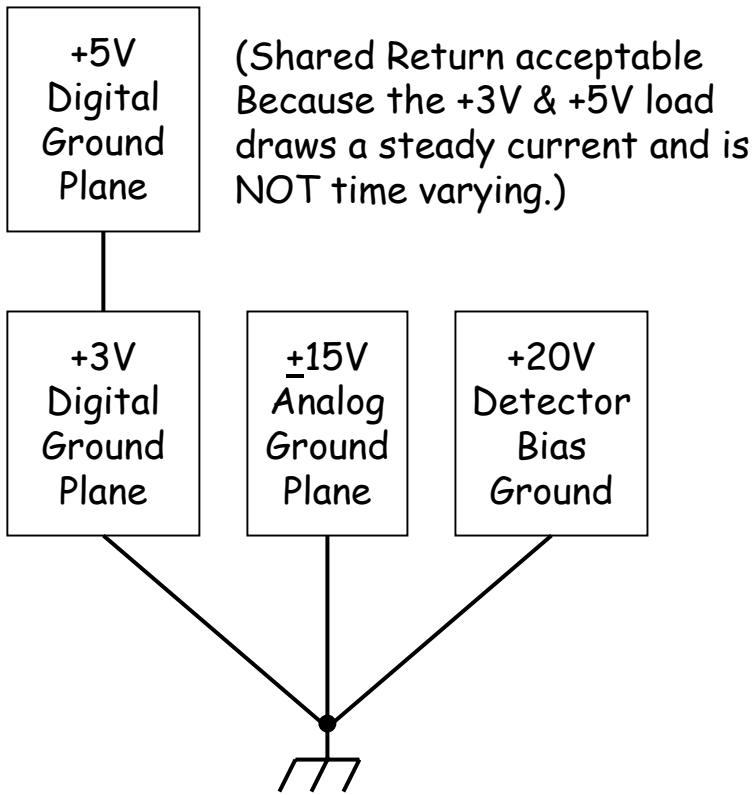

Low Risk

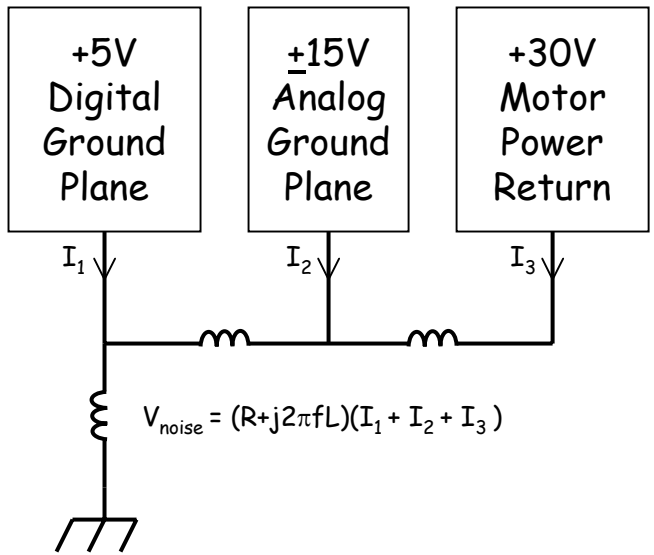

High Risk

Be aware of variable or pulsed current loads with $j2\pi fL$ impedance.

Grounding Examples

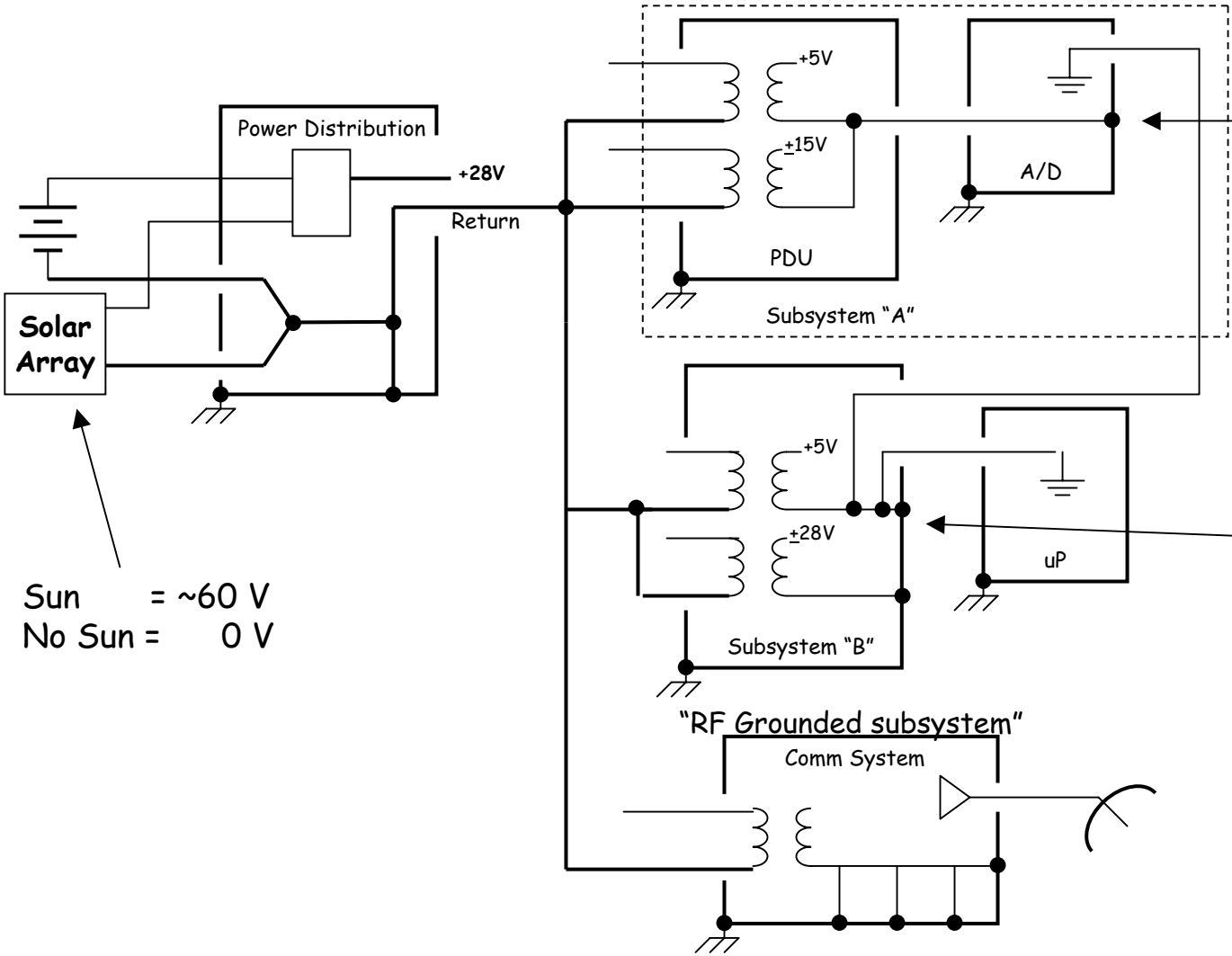

Grounded at A/D to minimize Chassis to Secondary delta voltage. [Filtering to address switching transient not shown.]

Grounded at power supply to minimize loop of switching transient current.

Sun = ~60 V
No Sun = 0 V

Typical Ground Architecture

Grounding Example (Cont.)

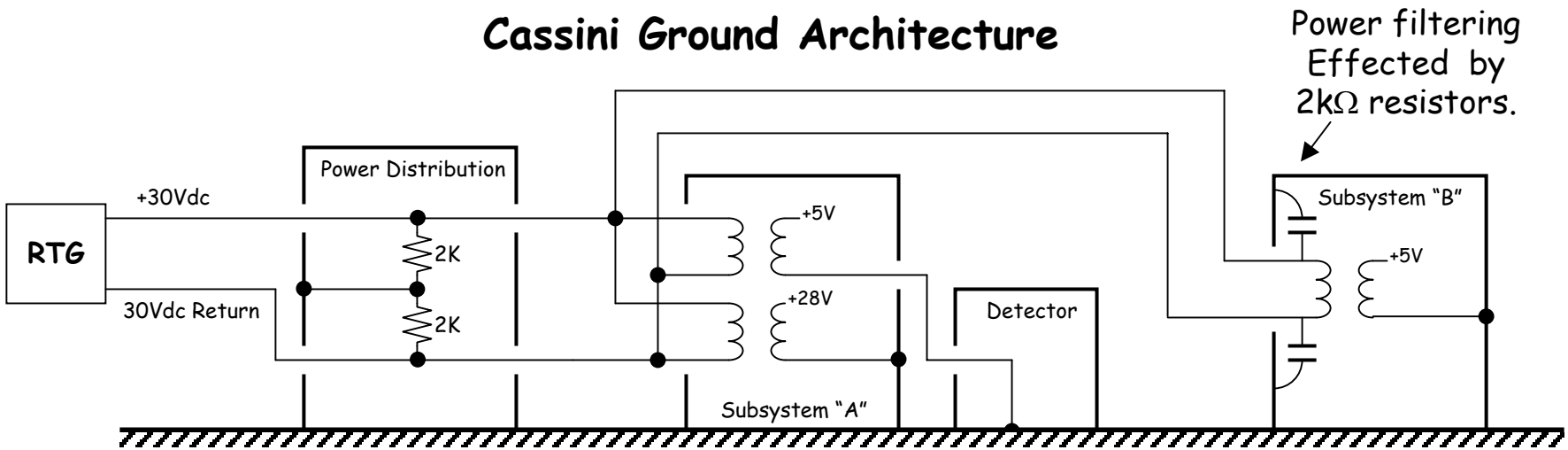

Benefit:

• The failure mode of a short between +30V to chassis will not result in loss of mission.

Risk:

• Capacitive feed-thru filters are effected by the 2kΩ resistors.

• Primary power bus will have a larger dV/dT relative to chassis and additional care must be taken to prevent coupling between the Primary power and any Victim circuits.

Grounds Loops

Common Mode Definition

DIFFERENTIAL MODE: Current flowing in a source/signal wire with an equal and opposite current flowing in its return wire.

COMMON MODE: Current flowing in the same direction along both conductors, (source/signal and return).

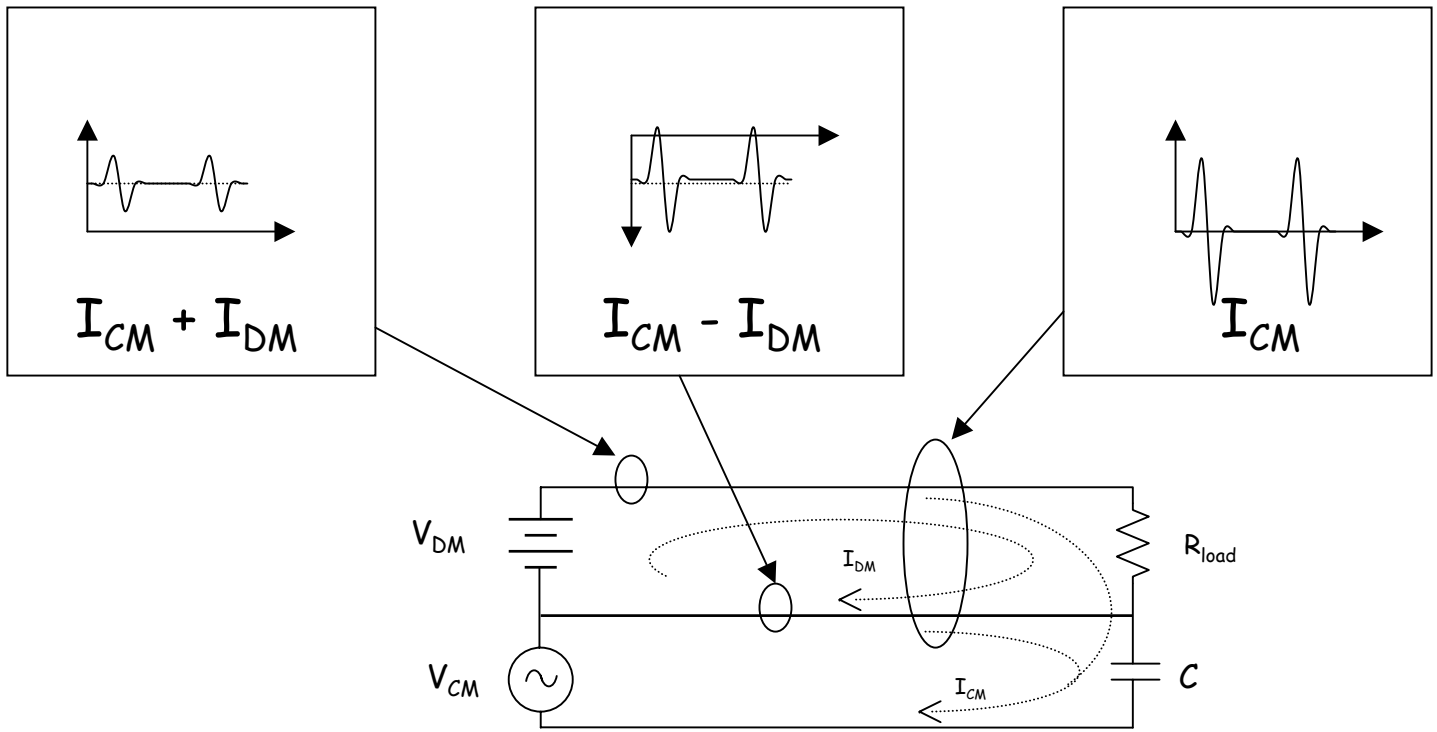

Ground Loop Definition

What the experts say:

Henry Ott, "Noise Reduction Techniques in Electrical Systems",Second Edition:

Ground loops mentioned in a negative connotation on at least 7 pages, but no definition.

David Weston, "Electromagnetic Compatibility, Principles & Applications":

No reference to ground loops.

Michel Mardiguian, "Controlling Radiated Emissions By Design":

"Ground" & "loop area" mentioned on 2 pages as a bad thing, but no definition.

Ralph Morrison, "Grounding and Shielding Techniques", Fourth Edition:

"Grounding the input and output circuits causes the classic 'ground loop', and this will result in a very noisy signal".

Clayton Paul, "Introduction to Electromagnetic Compatibility":

"The difference in voltage between two ground systems…can result in another potentially serious interference problem, which is referred to as a 'ground loop'."

Preferred Definition

A ground loop is a current path,
either unintentional or intentional,
which violates the grounding design or grounding requirements.

All Possible Ground loops on a Spacecraft:

1. **Primary Return to Chassis**
2. **Secondary Return to Chassis**
3. **Primary Return to Secondary Return**
4. **Primary to Primary Return**
5. **Secondary to Secondary Return**
6. **Chassis to Chassis**

A Ground Loop in a system may create a noise Source or may create a nose Victim.

Primary Return to Chassis

Example

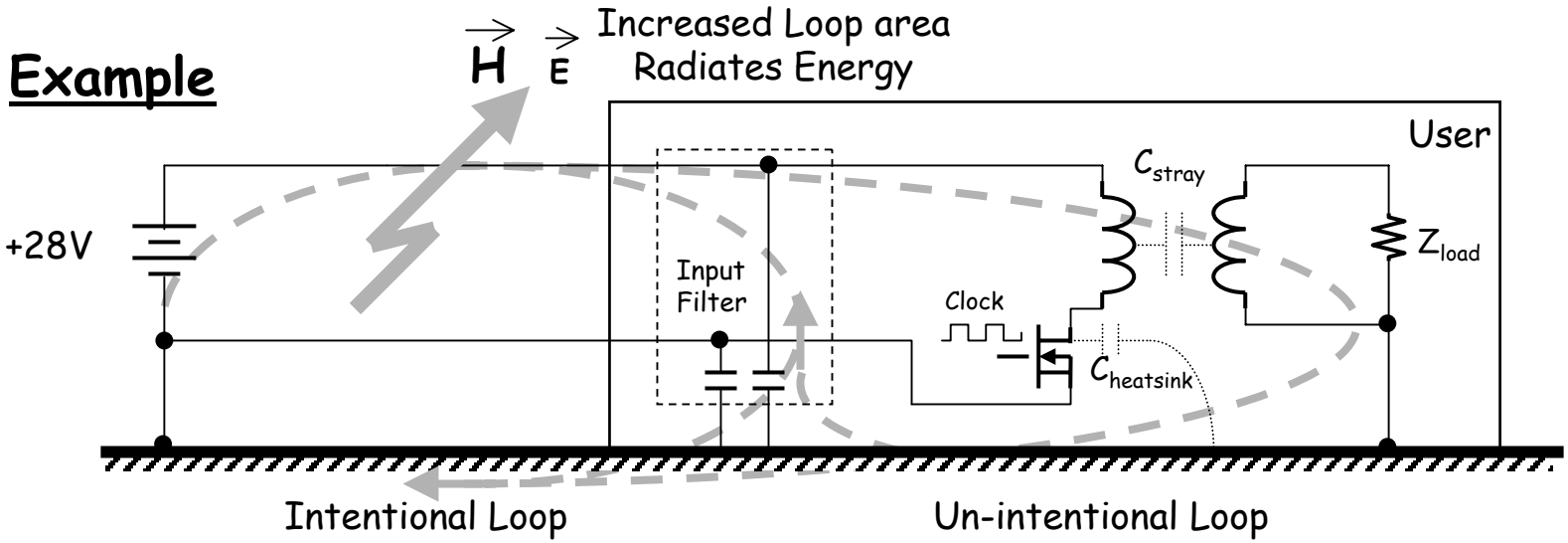

Primary to Chassis isolation requirement is violated in terms of AC (not DC).

Potential Good or Bad Loop

Result:

- Large loop area most likely will result in failure to pass RE02. (Source)
- Chassis currents may be a problem for low noise systems. (Source)
- Intentional Loop may reduce the external noise as seen by user, as well as, internal noise as seen by the supply. (Victim)
- Power systems are rarely affected by current in return-chassis loop (as a result of an magnetic flux). (Victim)

Secondary Return to Chassis

Example

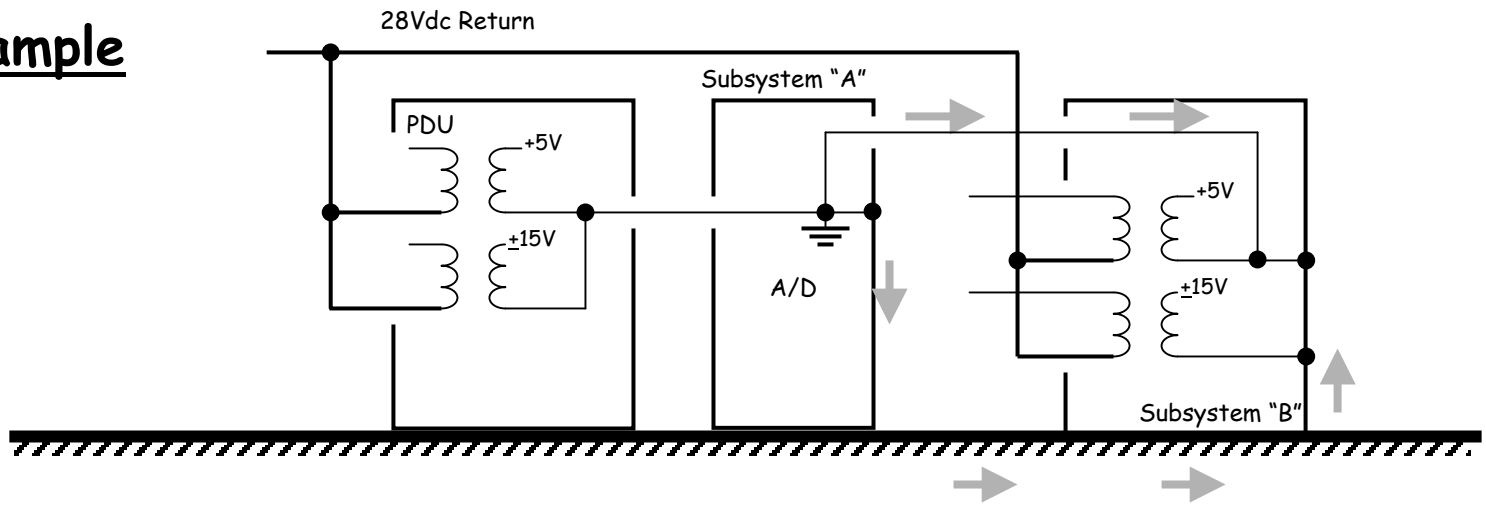

Potential Good or Bad Loop

Two connections violates the Single Point Ground Design, but not an RF ground Design.

Result:

- Large loop area most likely will result in failure to pass RE02. (Source)
- Current flow in the Chassis may be a problem for low noise systems. (Source)
- More susceptible to magnetic fields inducing a current in the 'Chassis to Return' loop. (Victim)

Primary to Secondary Return

Major Concern

Example

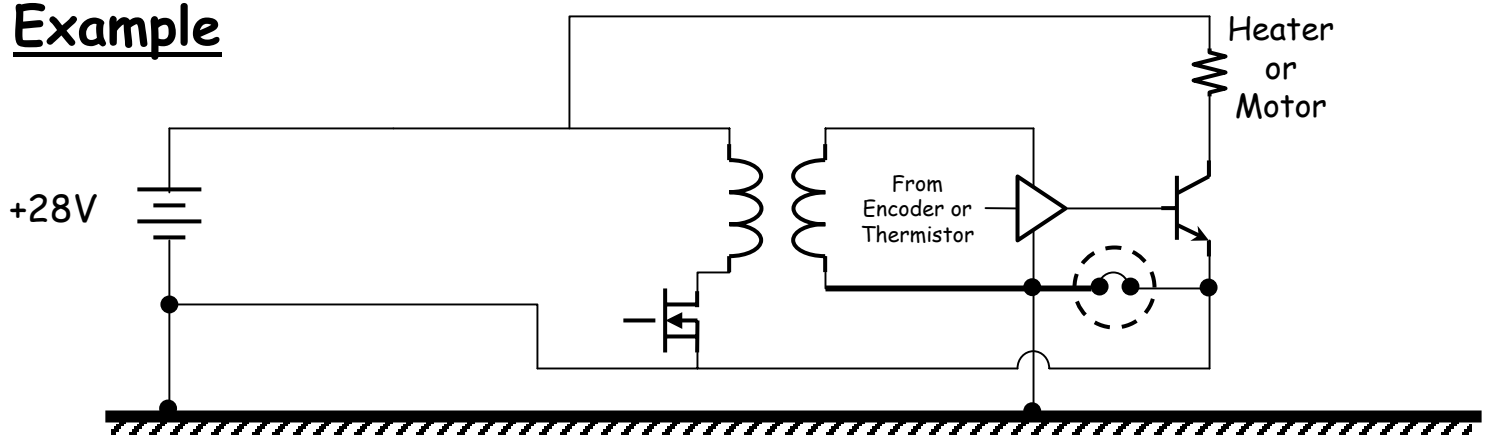

Primary Return to Secondary Return isolation requirement is violated.
Primary Return to Chassis isolation requirement is violated.

Result:

- Connection allows relatively noisy Primary Power currents to flow in the Secondary Circuitry.(Victim)

- Due to Secondary reference to chassis, Primary Power currents can now flow in the chassis (Victim & Source)

- The isolation poses a challenge to design low noise Motor or Thermal controllers.

The most common Grounding Problem

Primary to Primary Return

Example

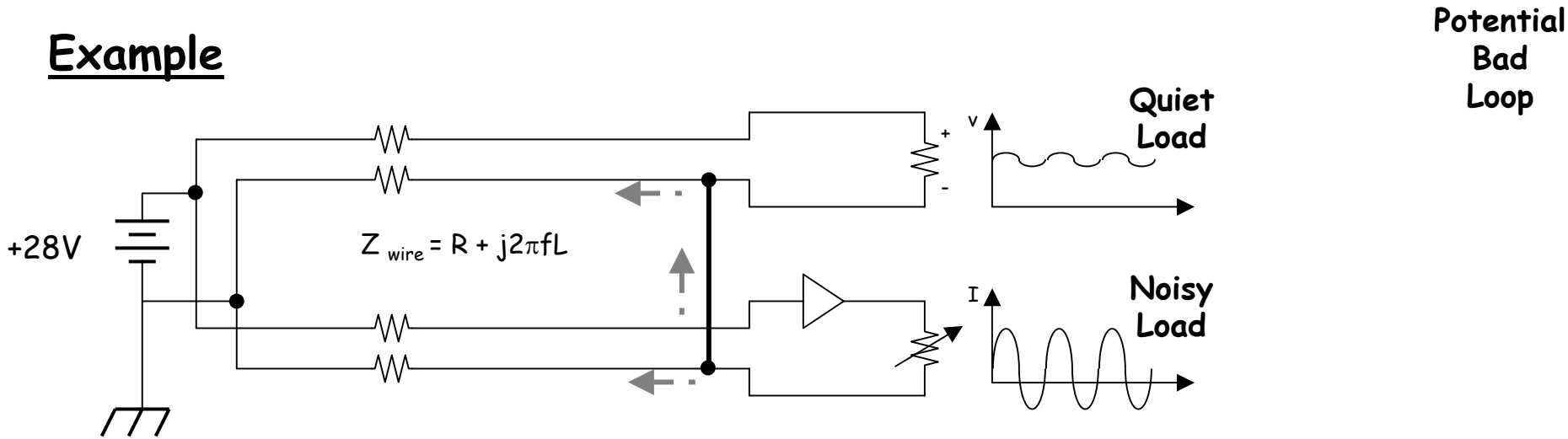

Result:

• Connection allows "noisy load" currents to flow in the "quiet load" wires, resulting in a noise seen at quiet load. (Victim/Source)

• Except the increase magnetic field due the the larger loop area, note that the connection could go un-noticed, IF the load current is DC or the harness impedance is negligible.

• Potentially susceptible to current induced by magnetic field, but rarely is the field that strong when compared to the load current variations. (Source/Victim)

Secondary to Secondary Return

Potential Bad Loop

Example

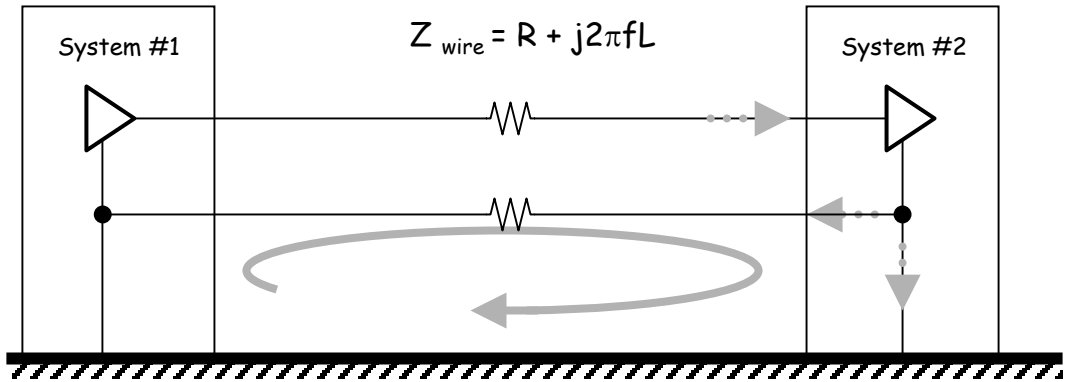

Result:

- Similar to Primary-Primary Return connection, noisy loads may interfere with quiet loads.(Source)

- Interfacing subsystem to subsystem may result in higher emission from chassis current loop, due to both systems referenced to chassis. (Source)

- Potentially susceptible to current induced by magnetic field, rarely for digital interfaces & small potential for analog circuitry.

Chassis to Chassis

Good Loop

Example

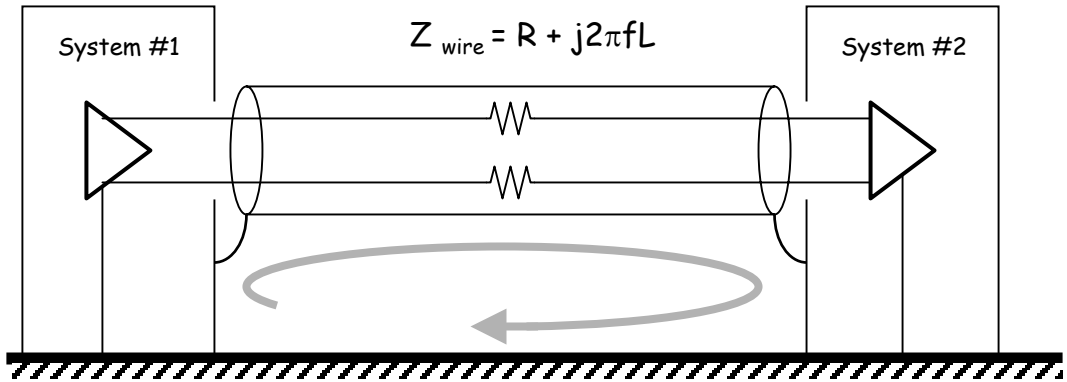

Result:

• Any structure that is isolated from the rest of the chassis is susceptible to potential damage due to Space Charging.

• Failure to make the shield connection will result in NO attenuation of the interface's radiated magnetic field. (Source)

• Failure to make the shield connection will result in a magnetic field inducing a current in the circuit rather than inducing a current in the shield and dissipating as heat. (Victim)

Power Supply Noise Problems

Switching Mode Power Supply

The largest noise source on a spacecraft is usually the DC-DC switching mode power supplies because:

1. The noise is created from the largest source of energy, large dV/dT at a large current (entire supply load current).

2. The switching transient Differential Mode noise is a non-continuous signal that is not adequately measured by the Mil-Std 461 Conducted Emissions tests.

3. The Common Mode noise is rarely specified, measured or addressed in the design.

Approximately 90% of the Spacecraft noise problems that we investigate are due to the power supply switching transient!

Power Supply Common Mode

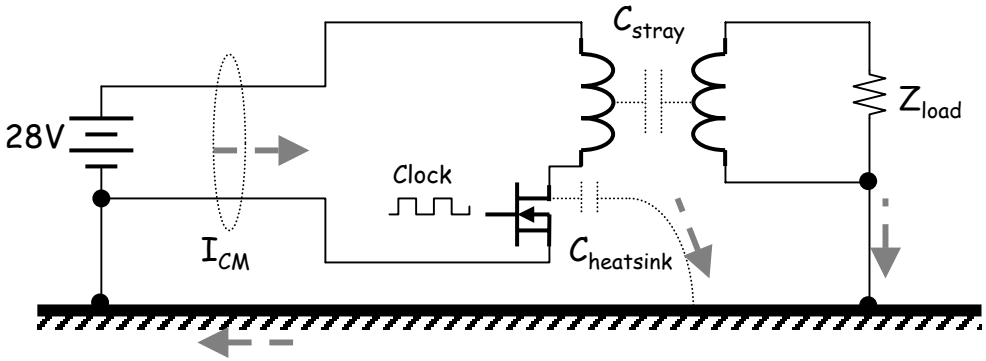

DC-DC Switching Mode Power Supply

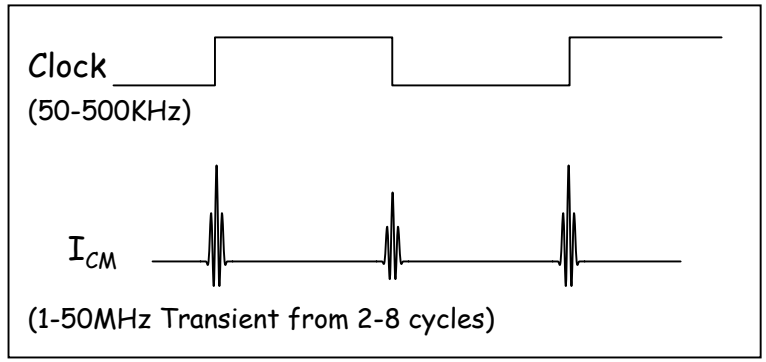

The two preferred paths for the Common Mode current are:

1. Through the stray capacitance between the primary and secondary transformer windings,
2. Through the switching FET(s) to heat sink capacitance.

The Common Mode current can be controlled by:

1. Transformer shield windings (trade magnetic coupling performance)
2. Isolated heat sinks (trade complexity using "Ground X")
3. Controlling the FET switching speed (trade converter efficiency).
4. Common Mode chokes (trade mass & board real estate) [Most common Solution]

A combination of capacitance and CM chokes are the most effective and common solution.

Time Vs. Frequency Domain

Frequency

Plot #1
-45.31 dBV (5.43mV)

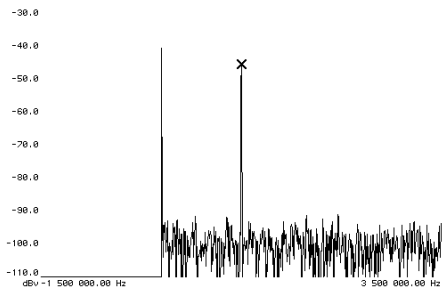

Plot #2
-48.22 dBV (3.88mV)

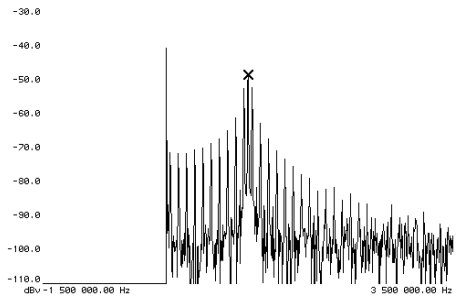

Plot #3
-57.55 dBV (1.33mV)

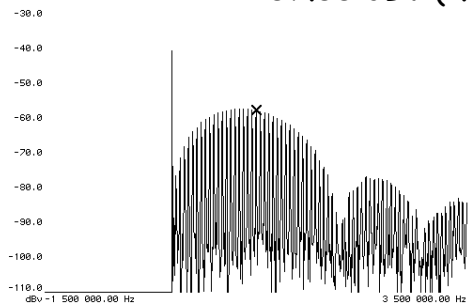

Time

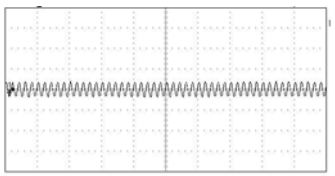

Plot #1
Continuous Sine Wave
Vpp = 5.4mV

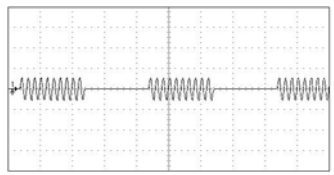

Plot #2
50% Amplitude Modulation
Vpp = 7.8mV

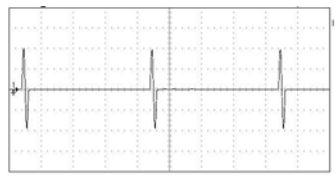

Plot #3
Single Pulse
Vpp = 77mV

Difference: X2 X58

Looking at the Limits

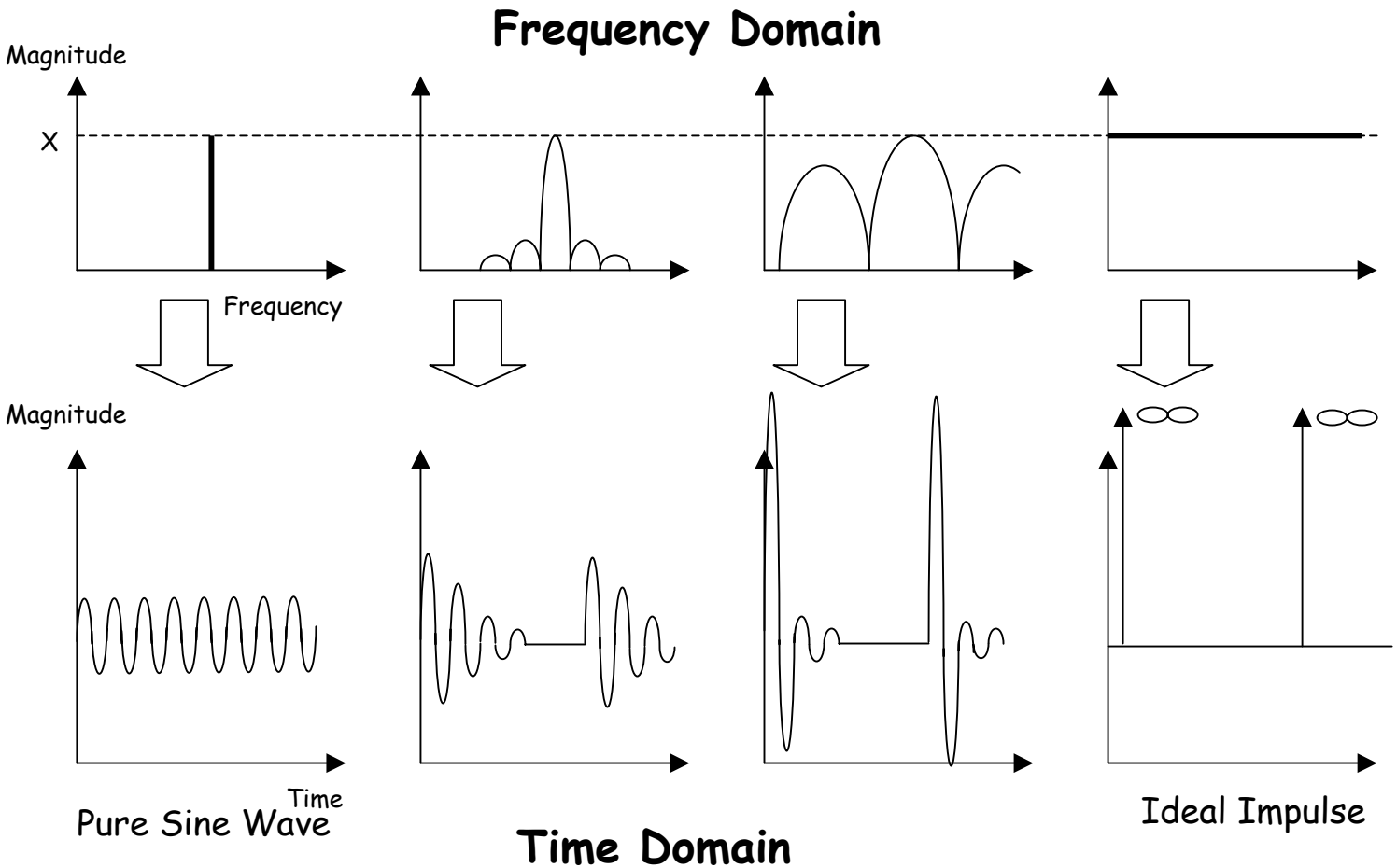

As the periodic signal approaches an ideal impulse, the energy fills the frequency spectrum.

Transient Examples

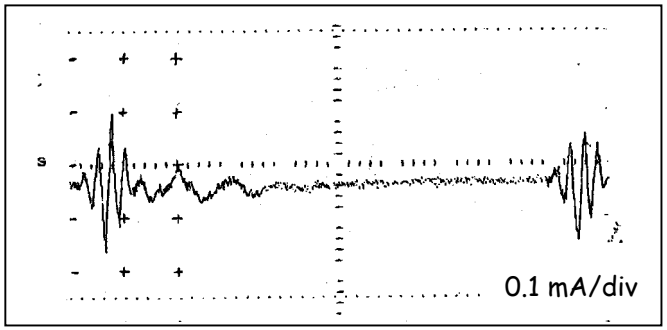

EOS-AURA, HIRDLS Instrument
From Rutherford Appleton Laboratories, UK
500KHz switching with
25 MHz Ringing' at ~0.35mA_{pp}

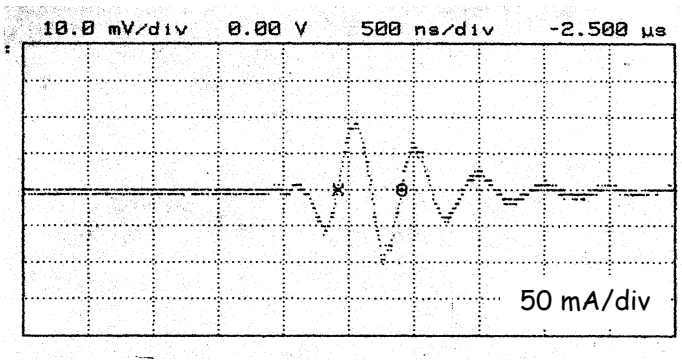

STS GAS Can, SOLCE Instrument
From GSFC
2.1 MHz Ringing' at 200 mA_{pp}

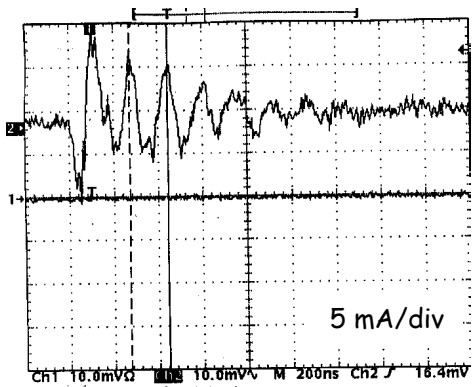

SIRTF Mission, Infrared Array Camera (IRAC) Instrument
From GSFC
GSE Power supply, 2.9 MHz Ringing' at18 mA_{pp}

Conducted Emissions

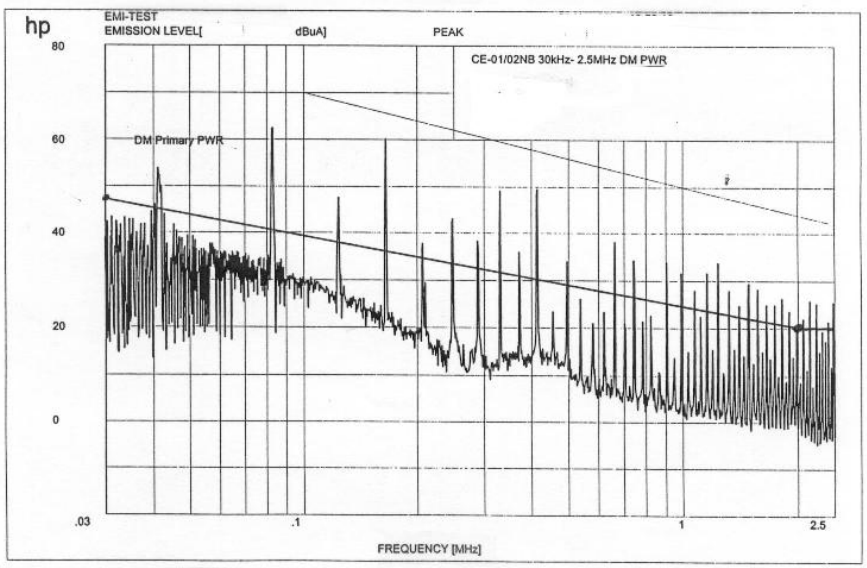

Differential Mode

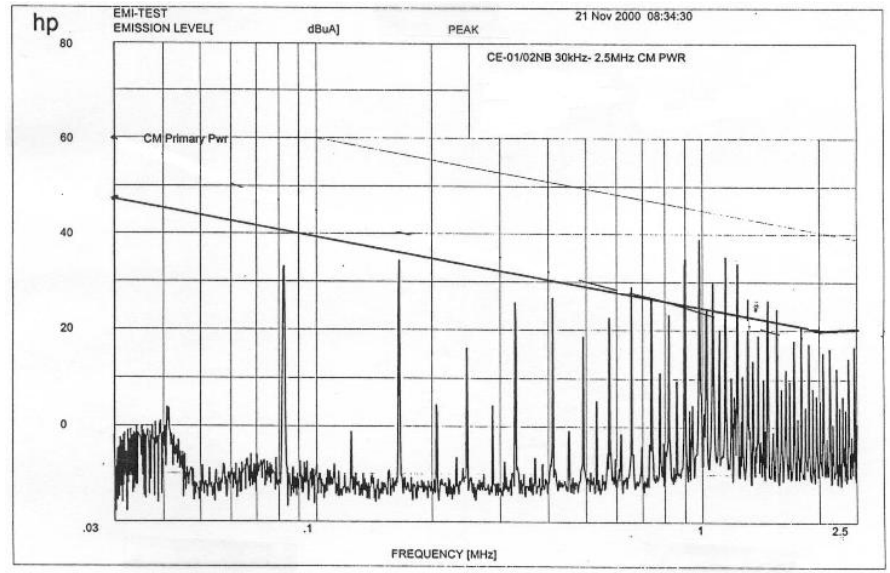

Common Mode

Will this system cause an electromagnetic Interference problem?

Electronic System Response

- The larger the impulse, the more likely it will reach a level that will disturb a system. For a power supply transient, the impulse width will be from 1usec to 20nsec. Large enough to be detected by digital systems and analog filters.

- Recalling Control Theory: A system's response to an impulse input will be the system's transfer function. Therefore, one will observe a subsystem's resonant frequency and not necessarily the impulse itself.

- To infer a signal's magnitude from frequency domain data, one must look at the magnitude AND the spreading of energy in the spectrum.

- Unlike this example, most system will have multiple noise sources. Therefore, it's even harder to recognize the signature of a single pulsed emission.

Using the Source-Coupling-Victim Approach

Design Concept

COUPLING

Capacitance or
Mutual Inductance
Dominate

SOURCE

Electric Field or
Magnetic Field
Dominate

VICTIM

High Impedance
Low Impedance

Electric Field:
Large dV/dT
Or
dV/dI > 377

Magnetic Field:
Large dI/dT
Or
dV/dI < 377

Capacitive:
Large over-lapping
Planes

Mutual Inductance:
Large Circuit Loop areas
located close together

High Impedance:
$Z \geq 377\Omega$
Sensitive to
Electric Fields

Low Impedance:
$Z \leq 377\Omega$
Sensitive to
Magnetic Fields

"Source" versus "Victim"

The EMC design approach for a Source and the Victim is different and they must be treated separately.

<u>SOURCE</u>: Generator of the noise signal

- Design goal is to **control the current flow** (take advantage of the circuit's desired current path), thus minimize the generated fields.

- Rarely a Victim

<u>VICTIM</u>: Effected by the noise signal

- Design goal is to select a configuration for maximum protection from system specific noise source currents, case-by-case.

- Rarely a Source

Noise Coupling Mechanisms

NEAR FIELD

1. Cross-talk: The electromagnetic radiated coupling is large enough to be described by circuit Theory. [Capacitive coupling & Mutual Inductance coupling.]

2. Common Ground Impedance: Coupling not necessarily due to radiated energy rather a changing reference caused by variable current flowing through an impedance. [Resistive]

FAR FIELD

1. Plane Wave Coupling: For spacecraft, signal contributions from Earth sources or high frequency (typically >10 MHz) local spacecraft sources.

- If the Near Field coupling is addressed, the Far Field is of virtually never an issue due to its comparatively small magnitude.

Capacitive Coupling

Electric Field or Capacitive Coupling

$$V_{noise} = j\omega C * V_{source} * \left(\frac{Z_V * Z_{Vload}}{Z_V + Z_{Vload}}\right)$$

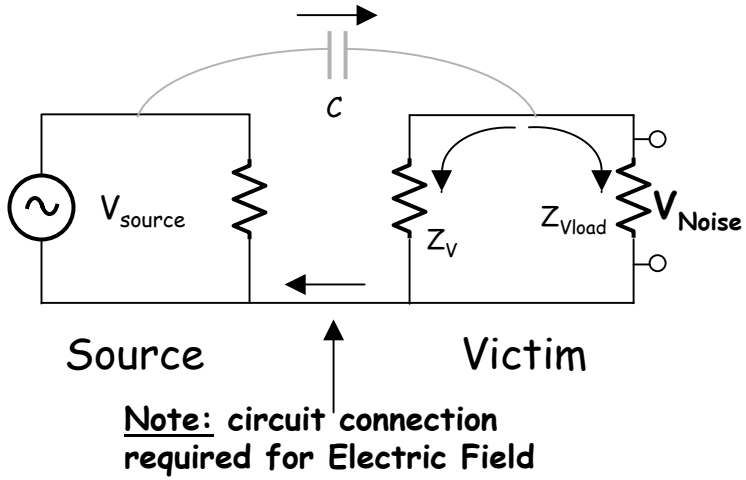

Current from the Source capacitively couples into the Victim's circuit.

- V_{noise} increases with an increase in the Source's frequency, [$j\omega$].
- V_{noise} increases with an increase in the common capacitance, [C].
- V_{noise} increases with an increase in the Source's Voltage, [V_{Source}].
- V_{noise} increases with an increase in the Victims circuit impedance, [$Z_V + Z_{Vload}$].

Mutual Inductance Coupling

Magnetic Field or Mutual Inductance Coupling

$$V_{noise} = j\omega M * I_{source} * \left(\frac{Z_{Vload}}{Z_v + Z_{Vload}} \right)$$

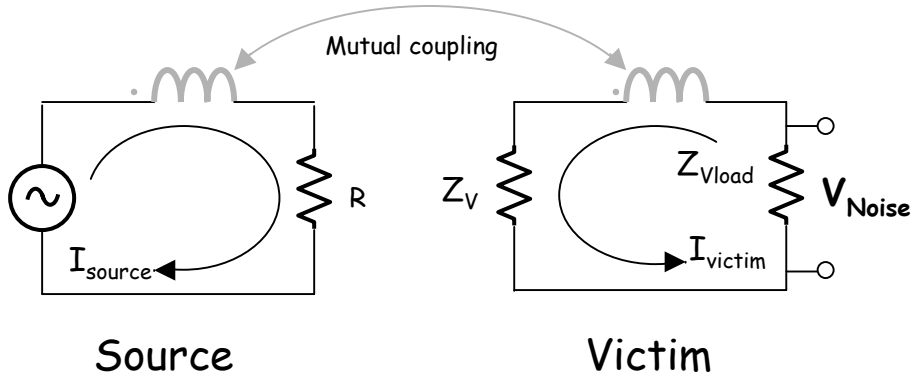

Note: **direction of current flow & no common circuit connection required**

Current from the Source mutually couples into the Victim's circuit.

- V_{noise} increases with an increase in the Source's frequency, [$j\omega$].
- V_{noise} increases with an increase in the mutual coupling, [M].
- V_{noise} increases with an increase in the Source's current, [I_{Source}].
- V_{noise} **increases** with an **decrease** in the Victims circuit impedance, [$Z_V + Z_{Vload}$].

Common Ground Impedance

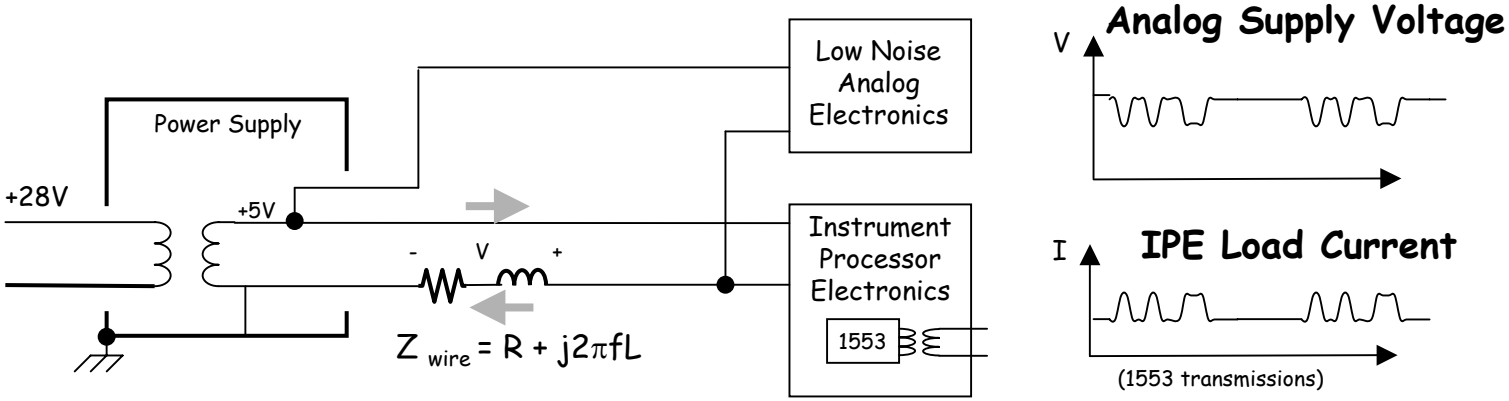

- The 1553 transmission current change creates a voltage drop in the common ground impedance and results in a change of the supply voltage at the analog subsystem.

- The Low Noise Analog Electronics power plane may capacitively couple into any sensitive analog circuits.

Spacecraft Sources

Inductive Sources

- Thermal-Electric Cooler
(<100Hz, up to 20Amps, sine wave)

- Motor circuits
(10-100KHz, several amps, pseudo-sine wave)

- All Primary & Secondary Power lines, (look for variable load current)

- Temperature Controllers without rise/fall time Control, (look for variable load current)

- Spacecraft Torquer Rods, (look at turn ON/OFF transient, usually DC excitation)

Capacitive Sources

- Primary Power Switching Transient, (two frequencies of concern: 50KHz-500KHz switching frequency and 1-50MHz oscillation frequency,

- Motor circuits

- 1553 transmission causes large power draw which results in 5V drop to ~4.6V.

- If it is not clear which field is dominate, consider the source as both capacitive and inductive.

Simple System's Approach

- Identify the system's Victims (e.g., Detector, ACS sensors), list the Sources (motors, power supply switching transients, etc.) along with coupling path.

VICTIM	Coupling	SOURCE
Victim 1 (High impedance detector)	Coupling 1 (Large Capacitance)	Source 1 (large) (Electric Field Dominate)
Victim 2 (Low impedance detector)	Coupling 2 (Large mutual inductance)	Source 2 (large) (Magnetic Field Dominate)
...		
Victim N (High impedance detector)	Coupling (small capacitance & mutual coupling)	Source X, small (Magnetic Field Dominate)

HIGHEST RISK

↓

LOWEST RISK

- Select a Grounding design that protects against the "High Risk" concerns.

Grounding Example

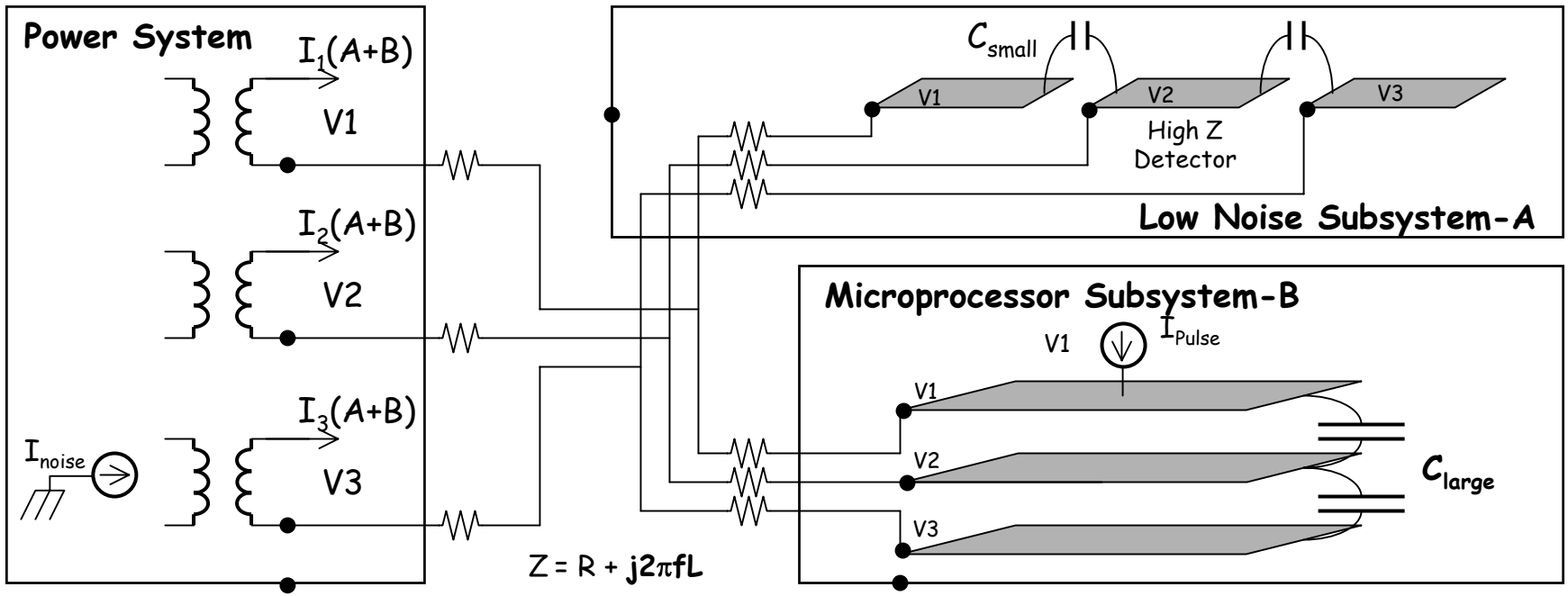

- Over-lapping Planes (Power & Return) creates AC short between planes.

- Secondary Return to Secondary Return connections must be made at only one location, (Subsystem-A, Subsystem-B or Power System). And the Secondary must be referenced to Chassis.

Which ground configuration is the lowest risk?

"Lowest Risk" Configuration

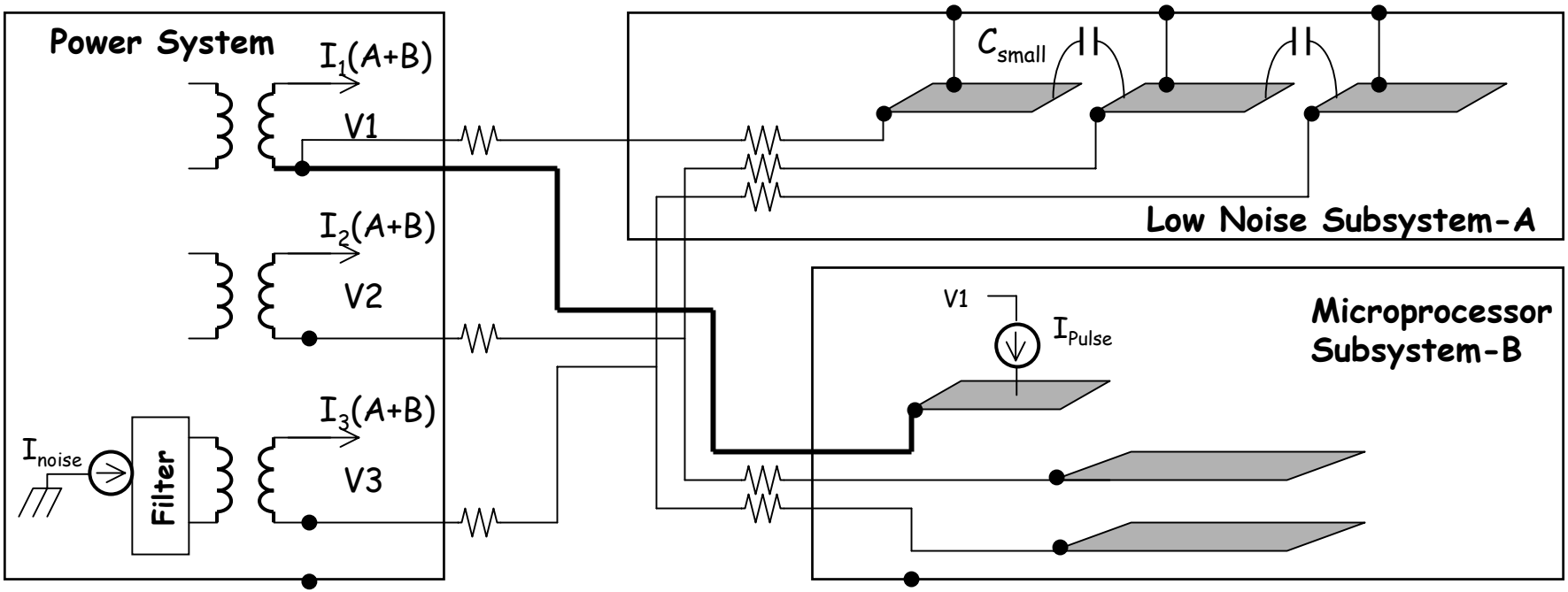

- Add Filter to isolate external noise from entering the Power System.

- Separating the wiring, reducing the line impedance and eliminating the over-lapping planes isolates the pulsed current from the other subsystems.

- In this case, the lowest risk connection is within Subsystem-A to minimize the capacitive coupling between circuit/chassis from any source(s).

Summary
& Other Stress Lowering Suggestions

Think In 'Current'

The key to successful ElectroMagnetic Compatibility is knowing where your currents are flowing.

1. Define ground design to identify and/or control the current flow paths.

2. Define interfaces to control current flow

3. During Integration and testing verify the current paths, [Common Mode & differential Mode].

Using a house as an analogy, keep the clean water flowing separate from the used water.

Common Language

The Source-Coupling-Victim approach results in a **common language** and **systematic approach** to addressing potential EMC concerns.

- This results in less miscommunications in evaluating potential EMC concerns, [subsystem-subsystem & subsystem-System].

- There is traceability of the system design, therefore it is easier to evaluate changes late in the schedule.

- When there is an EMC problem, this process reduces the trouble-shooting time by identifying Sources.

- There are fewer personnel conflicts with a common language & established systematic approach.

Power Supplies

- For the power supply Common Mode switching transient:
  - Define allowable limit
  - Design the system to control the current flow
  - Record the Power Supplies Switching Transient.

- During subsystem testing:

  - Insure that the subsystem grounding configuration matches the system configuration.

  - Verify that the Device-Under-Test can withstand the input turn ON rate of change, [minimal and maximum].

  - Verify that the Device-Under-Test does not produce an unacceptable turn-ON/turn-OFF transient.

Systematic Approach

Use the following model:

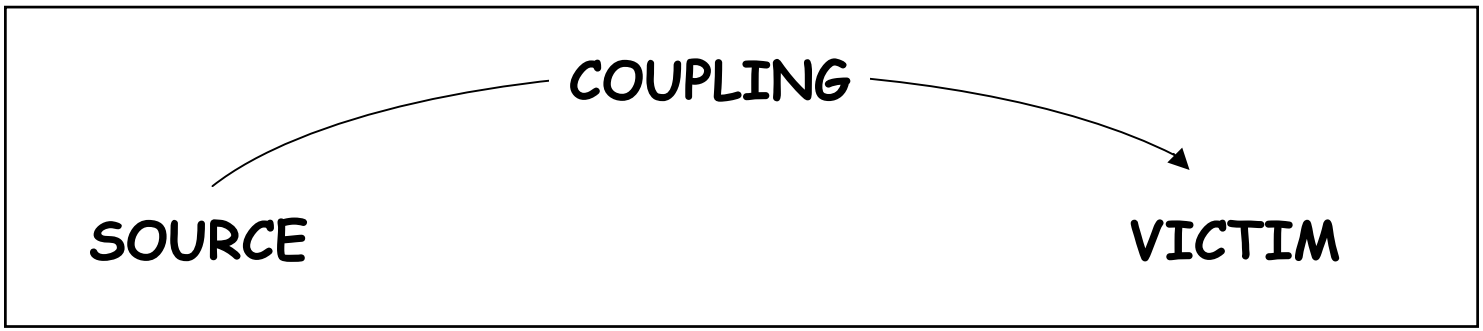

When someone uses the term "Ground Loop", just ask enough questions to create a Source-Coupling-Victim model!